nimax

CODING AND MARKING

Vx-Series
Thermal transfer printers

Uncompromising performance and reliability.

TTO Markers

Marking and coding on various types of flexible packaging film

The ideal solution for any sector, from food to pharmaceuticals.

Thermal transfer printers (TTOs) are industrial printers that apply codes directly onto packaging or labels using a heated ribbon that transfers ink to a defined print area.

The Domino Vx-Series range of markers, thanks to their ease of installation, versatility, and reliability, provides the ideal solution for both manufacturers and packaging machine builders.

These printers integrate seamlessly with thermoforming and labelling lines across a wide range of applications in the food and pharmaceutical industries.

Domino Vx-Series TTO markers produce variable data codes that are always clear and high-resolution.

Codes can be created and edited quickly and easily, without manual setup, and with a wide variety of characters available.

EXCEPTIONAL PERFORMANCE

- Designed to meet current and future production needs, the Vx range reduces line downtime and lowers TCO (Total Cost of Ownership), thanks in part to ribbon-saving modes that help optimise consumption.

  Print resolution of 300 dpi, with speeds of up to 8.3 prints/sec, and intermittent printing up to 75 mm.

  User interface access control, with the option to customise user privileges.

INDUSTRIAL ROBUSTNESS

- Designed for easy integration into any packaging machine, including labellers, vertical and horizontal form-fill-seal machines, and fillers.

  Easy drawer management and an optional protection kit simplify operation and maintenance.

  Its robust design makes it the ideal choice for industries such as pharmaceuticals, life sciences, and food, particularly on high-speed lines and for applications requiring complex dynamic codes containing large amounts of variable data.

Domino Vx50i

Designed for companies looking for a simple and reliable solution for coding on flexible packaging.

With four ribbon-saving modes, the Vx50i allows you to use less ribbon. It reduces operating and maintenance costs because it is fully electric and does not require compressed air. Thanks to its integrated software, the Domino Vx50i thermal transfer printer operates without the need for a dedicated external interface. Its ribbon-saving modes help reduce consumption and TCO. Ribbon replacement is quick and easy thanks to the fast spool-release system and the lightweight drawer.

Domino Vx150i

The ideal solution for companies that need reliable, high-performance coding on flexible packaging, offering the ideal balance between ease of use and advanced functionality.

Print resolution of 300 dpi, with speeds of up to 6 prints/sec, with intermittent printing up to 75 mm. The longer ribbon length of the Domino Vx150i thermal transfer printer, combined with the practical drawer management system, allows for longer production cycles and significantly reduces line downtime. The Vx150i also supports promotional code and serialization management, providing valuable support for traceability and anti-counterfeiting activities.

Domino Vx350i

TTO printer designed for the most demanding applications on flexible packaging, where high performance, continuous reliability, and maximum production speed are required. Within the Vx range, it represents the highest-performance solution, ideal for high-intensity production lines.

Its robust construction makes it particularly suitable for the food, pharmaceutical, and life sciences industries, where operational continuity, printing precision, and complex dynamic code management are essential. With print speeds of up to 8.3 prints per second, the Vx350i ensures consistent performance even on high-speed lines and is designed to integrate easily with leading packaging systems. The system's modular design allows flexible configurations: from a standalone print head to keep costs down, to a complete solution with touchscreen and interface box for optimal in-line management and integration.

The removable and washable drawer, equipped with connector protection, simplifies maintenance and makes the system suitable for complex and demanding production environments.

Reliable labelling for everything you produce

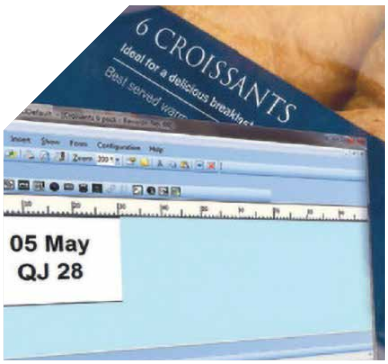

QUICK DESIGN

Using QuickDesign software minimises errors and allows you to manage coding from a single location, even if you have production lines with different requirements.

QuickDesign uses standard communication protocols and can be integrated into existing ERP systems.

R SERIES VISION SYSTEM

With Domino's R-Series vision system, you can automate code inspection by checking for presence, positioning, and legibility, ensuring that every product is correctly coded while allowing operators to focus on other tasks.

RIBBON

To meet every specific application requirement, we offer a wide range of ribbons available in various colours and types, designed to ensure high-definition coding (300 dpi) and maximise sustainability. Thanks to the long ribbon rolls, our ribbons drastically reduce line downtime and waste, ensuring excellent and durable marking on any type of flexible packaging film or substrate.

Common features across models:

- **Print mode:** both intermittent and continuous
- **Print resolution:** 300 dpi
- **Operation:** fully electric – no compressed air required
- **PC connection:** via Ethernet cable
- **Support brackets** *(optional)*: full range available
- **Protocol:** Dynamark

DISCOVER NIMAX **DIGITAL INNOVATIONS**

Line Strategy by nimax

Line Strategy is the application that gives you full control of your production line from a single workstation:

- Connects machines of any brand on the line;
- Reduces human error and enables centralized production control;
- Provides real-time reports on production performance;
- Reduces costs and streamlines tooling, control, and maintenance processes;
- Interfaces with company MES and ERP systems.

MyNimax Service Portal is your central platform for managing your Nimax machine fleet:

- AI-powered support with ai.max, available 24/7 for fast issue resolution;
- Integrated e-shop for easy ordering of consumables and spare parts;
- Unlimited remote assistance from our technical support team;
- Complete service and maintenance history.

Technical Specifications

Domino Vx50i Specifications	Intermittent Mode (IM)	Continuous Mode (CM)
Print head width	32 mm	
Print area (32/53 mm print head)	32x55 mm	
Maximum ribbon length	770 m (AR)	
Print speed	Up to 400mm/sec	From 10 to 680 mm/sec
Maximum print frequency	4 prints/sec	
Connectors	3+1 USB, 1RJ45, 1 GPIO, 1 encoder	
Supported print formats	EAN, GS1, UCC, QR Code, Data Matrix, Han Xin, ITF, Code 128, text, graphics, 1D, 2D codes etc.	
Dimensions	200 mm (width) x160 mm (height) x 218 mm (depth)	
Weight	5.9 kg	
Drawer weight	0.9 Kg (without ribbon)	
Power supply	From 100 to 240 VAC, 50/60 Hz	
Operating temperature/humidity	From 5 to 40°C / from 20% to 80% RH	
Pack function (optional)	Economy, Retraction, Column	Economy, Retraction, Column, Mid print stop
Pack funzione (opzionale)	Serialization, Advanced security, Promotional coding	
TouchPad (optional)	7" TouchPad, Dimensions: Width 220 mm x Height 150 mm x Depth 30 mm, Multi-language support	

Domino Vx150i Specifications	Intermittent Mode (IM)	Continuous Mode (CM)
Print head width	32 or 53 mm	
Print area (32/53 mm printhead)	32x75 mm / 53x75 mm	32x100 mm / 53x100 mm
Maximum ribbon length	770 m (AR)	
Print speed	Up to 600mm/sec	From 10 to 750 mm/sec
Maximum printing frequency	6 prints/sec	
Connectors	3+1 USB, 1RJ45, 1 GPIO, 1 encoder	
Supported print formats	EAN, GS1, UCC, QR Code, Data Matrix, Han Xin, ITF, Code 128, text, graphics, 1D, 2D codes etc.	
Dimensions	200 mm (width) x160 mm (height) x 218 mm (depth)	
Weight	5.9 kg	
Drawer weight	0.9 Kg (senza ribbon)	
Power supply	From 100 to 240 VAC, 50/60 Hz	
Operating temperature/humidity	From 5 to 40°C / from 20% to 80% RH	
Ribbon saving mode	Economy, Retraction, Column	Economy, Retraction, Column, Mid print stop
Pack function (optional)	Serialization, Advanced security, Promotional coding	
TouchPad (optional)	7" TouchPad, Dimensions: Width 220 mm x Height 150 mm x Depth 30 mm, Multi-language support	

Domino Vx350i specifications	Intermittent Mode (IM)	Continuous Mode (CM)
Versions	Left and right	
Print head width	53 mm	
Print area (32/53 mm print head)	53X75 mm	53x500 mm standard 53X750 mm (advanced package)
Maximum ribbon length	1200 m (AR)	
Print speed	Up to 600mm/sec	Da 10 a 750 mm/sec standard Da 10 a 1200 mm/sec (advanced package)
Maximum print frequency	6 prints/sec (standard) 8,3 prints/sec (advanced)	
Printer connectors	2 USB, 1 GPIO, 1 encoder	
Interface box connectors	2 USB , 1 RJ45, 2 GPIO, 1 encoder, 2 porte IX, 1 for connecting the printer	
Supported print formats	EAN, GS1, UCC, QR Code, Data Matrix, Han Xin, ITF, Code 128, text, graphics, 1D, 2D codes etc.	
Dimensions	200 mm (width) x160 mm (height) x 218 mm (depth)	
Weight	9.1 kg	
Drawer weight	1.7 Kg (without ribbon)	
Power supply	Printer without interface box: 48V, 6.3A, 300WPrinter with interface box: 100-240VAC, 50/60Hz	
Degree of protection	IP55 when protection kit is installed (non-operational)	
Operating temperature/humidity	From 5 to 40°C / from 10% to 90% RH	
Ribbon saving mode	Economy, Retraction, Column	Economy, Retraction, Column, Mid print stop
TouchPanel	10.1" touchscreen - multilingual support	

Vx50i

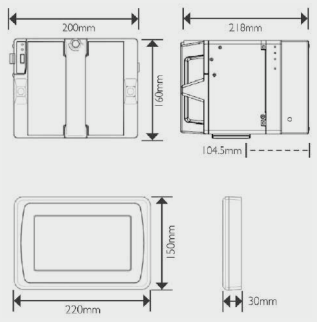

Vx150i

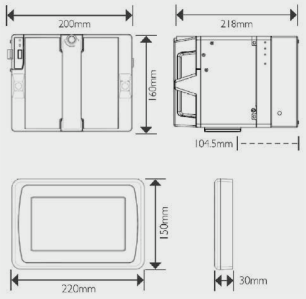

Vx350i

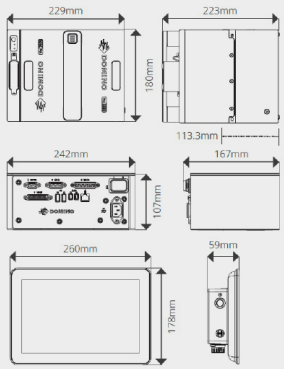

DISCOVER MORE